Reduced Search Iterative Detection and Decoding: Issues and Solutions

Saleem Ahmed and Sooyoung Kim
Division of Electronic Eng., Chonbuk National University, Jeonju, Korea
Email: saleem3714@hotmail.com, sookim@jbnu.ac.kr

Hyung-Jick Ryu and Won-Yong Kim
Comesta, Inc., Daejeon, Korea 305-509
Email: {normalia, wykim}@comesta.com

***Abstract*—In this paper, we evaluate a number of reduced search detection methods for iterative detection and decoding (IDD) system. We evaluate the basic issues which can restrict the performance of the reduced search detectors in IDD systems. One of the main issues in reduced search detectors is related to missing hypothesis sometimes known as log likelihood ratio (LLR) clipping problem. If a suitable method is not used for missing hypothesis, it can degrade the performance of the reduced search based IDD systems. The solution is provided which can overcome the problem of missing hypothesis. The simulation results show that the proposed method provides substantial performance gain in each MIMO detector iterations.**

***Index Terms*—iterative detection and decoding, sphere decoding, log likelihood ratio**

I. Introduction

Iterative decoding is known to achieve near capacity performance in turbo codes [1]. The principle of iterative decoding can be extended to MIMO detection which is connected to the decoder and the MIMO detector. In this case, the iterative loop inside the channel decoder, and the iterative loop between the MIMO detector and channel decoder are utilized by iteratively exchanging the extrinsic log-likelihood ratios (LLRs) [2].

Maximum likelihood (ML) soft MIMO detection is the optimal choice because it can produce the best performance. A main problem with the ML detector is its exponentially increasing complexity. The complexity of ML detection can be reduced by limiting the candidates to be searched. For example, in list-sphere detector (LSD), only the P –symbol vectors that lie closest to the received signal vector, referred collectively as the candidate list, are used to produce the detector output [2]. Another technique is known as the iterative tree search (ITS) detection method which reduces the search space to be selected by means of the M-algorithm [3]. The Chase decoding can be used as well to build a list, which utilizes both linear filtering and ML method in order to build a list [4]. A soft-input soft-output single tree search sphere decoder (SISO-STS-SD) algorithm is capable to incorporate a priori information and generate soft estimate with reduced complexity [5]. However, most of the algorithm rebuilds a list in each iteration which adds to computational complexity. One of the issue with LSD is that sphere of sufficiently large radius and list size makes the LSD scheme as identical to the ML detector. There have been attempts to solve the radius setting and radius updates strategies [6], [7]. However, frequent update of radius update also increases the complexity.

There have been attempts to apply a linear MIMO detector by using a minimum mean square error (MMSE) scheme for JIDD [8]-[9], referred as soft interference cancellation (SIC)-MMSE scheme. In these schemes, soft interference cancellation scheme was combined with MMSE detection for symbol-level detection, followed by per bit LLR estimation. The SIC-MMSE has much lower complexity than the optimal detector and list based detectors. Its complexity is dominated by the matrix inverse operation in order to solve a number of linear equations. The weak point of SIC-MMSE is that its performance gap to optimal detector increases significantly with increasing signal-to-noise ratio (SNR). In [9], both a priori information provided by channel decoder and a posteriori information detected for previously detected layers is utilized to improve the reliability of the current processing layer.

One of the main issues with list detectors such as LSD is the log likelihood (LLR) clipping. LLR clipping problem is related to finding a suitable value for missing hypothesis in order to calculate the soft information using ML based detectors. The LLR clipping problem can occur with a small list size and probability of missing hypothesis increases as the list size is reduced. In this paper, we propose a suitable method to overcome the problem of LLR clipping by generating an opposite hypothesis for each missing hypothesis case [10], [11].

II. Terative Detection and Decoding

Fig. 1 shows a block diagram of the transmitter and receiver structure of an iterative-MIMO system with M transmit and N receive antennas. The transmitter is based on a bit-interleaved coded modulation (BICM)

Manuscript received June 2, 2014; revised August 13, 2014.

doi: 10.12720/lnit.2.2.129-133

transmission strategy. At the transmitter, the information bit vector, **u** is firstly encoded to produce the codeword, **c**. The length of each codeword is denoted as *n*. For bit-interleaving, *M K* code words are accumulated, where *K* denotes the number of bits per transmit symbol, and then they are bit-interleaved to form **x**. After bit-interleaving, the sequence is divided into M independent streams, and each stream consists of *K* bits, resulting in a total of *M K* number of bits transmitted in a MIMO frame. The bit vector mapped onto a MIMO frame can be represented as:

$$\mathbf{x} = [x_{1,1}, \cdots, x_{1,K}, x_{2,1}, \cdots, x_{M.K}], \tag{1}$$

where $x_{m,k}$ represents the *k* th bit mapped onto the *m* th symbol.

Consider a transmitted signal vector, $\mathbf{s} = [s_1, s_2, \cdots, s_M]^T$, where s is independently chosen from a complex constellation, *C*, whose cardinality is $|X| = 2^K$. The received signal vector is denoted as $\mathbf{y} = [y_1, y_2, \cdots, y_N]^T$, can be represented with an $N \times M$ complex channel matrix, **H** as follows:

$$\mathbf{y} = \mathbf{Hs} + \mathbf{n} \tag{2}$$

where **n** is an *N* x 1 complex Gaussian noise vector.

At the receiver, the MIMO detector first calculates the soft bit information (SBI) for *M K* bits from **y**. For de-interleaving, *n M K* SBI values are accumulated and passed through the de-inter leaver. After de-interleaving, the SBI values are passed to a channel decoder. The decoder produces soft output bits and then feeds them back into the MIMO detector. The soft output values generated by the decoder are bit-interleaved before passing to the MIMO detector. With each iteration, the accuracy of the SBI values improves. The information exchange between the decoder and MIMO detector iteratively continues until the desired performance is achieved. The intrinsic SBI (also called a posteriori information) of the *k*th bit of the *m*th symbol $x_{m,k}$, is given as follows using the log likelihood value of the probabilities:

$$L(x_{m,k} \mid \mathbf{y}) = \ln\left(\frac{P(x_{m,k} = +1 \mid \mathbf{y})}{P(x_{m,k} = -1 \mid \mathbf{y})}\right), \tag{3}$$

Using the Bayes' theorem and assuming that the bits in **s** are statistically independent of each other due to interleaving after channel coding, the above intrinsic LLR value can be expressed with sum of the interleaved a priori information from the channel decoder, L_a^d and the extrinsic information going to the channel decoder, L_e^c as follows:

$$L(x_{m,k} \mid \mathbf{y}) = L_a^d + L_e^c$$

$$= \ln\left(\frac{P(x_{m,k} = 1)}{P(x_{m,k} = -1)}\right) + \ln\left(\frac{\sum_{\mathbf{s} \in X_{m,k}^{+1}} P(\mathbf{y} \mid \mathbf{s}) \cdot P(\mathbf{s})}{\sum_{\mathbf{s} \in X_{m,k}^{-1}} P(\mathbf{y} \mid \mathbf{s}) \cdot P(\mathbf{s})}\right) \tag{4}$$

The second term, L_e^c, which is the extrinsic LLR value of coded bits can be calculated using the max-log MAP approximation as follows [2]:

$$L_e^c(x_{m,k} \mid \mathbf{y}) = \max_{\mathbf{s} \in X_{m,k}^{(+1)}} d_s - \max_{\mathbf{s} \in X_{m,k}^{(+1)}} d_s \tag{5}$$

where $X_{m,k}^{\pm 1}$ is the set of $2^{M \cdot K - 1}$ symbols $\mathbf{s} \in X$ for which $x_{m,k} = \pm 1$, and d_s can be found as follows:

$$d_s = -\frac{1}{N_0}\|\mathbf{y} - \mathbf{Hs}\|^2 + \frac{1}{2}\sum_{m,k} x_{m,k} L_a^d(x_{m,k}) \tag{6}$$

The SBI passed to the decoder, is the extrinsic information, $L_e^c = L - L_a^d$. The extrinsic information is passed through the inter leaver, and the channel decoder uses the interleaved a priori information L_a^c to estimate the information sequence, and generate its soft output, L_o^c. Subsequently, the extrinsic information for the MIMO detector, $L_e^d = L_o^c - L_a^c$ is estimated to generate L_a^d.

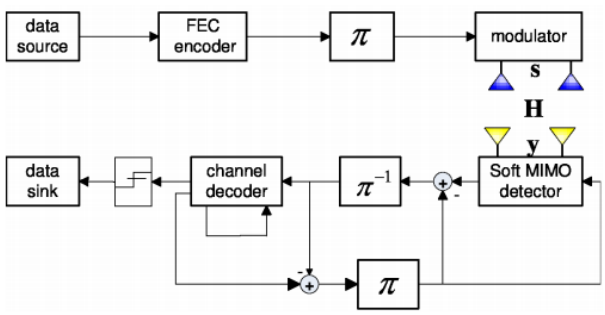

Figure 1. Block diagram of a MIMO system with IDD.

III. Reduced Search IDD Methods

The optimal choice for the MIMO detection is the ML detection with maximum a posterior (MAP) estimation, which is also sometimes referred to as the a posterior probability (APP) detection. The MAP decoder calculates the log likelihood value (*L*-value) for each bit of a received symbol. A main problem with the MAP detector is that it is computationally complex. Since the brute force APP detection is known to grow the complexity exponentially with the number of transmit antennas and with constellation points.

A. Concept of SD and Its List Version

The sphere decoding (SD), sometimes also referred as the sphere detection method intends to find the transmitted signal vector with minimum ML metric, that is, to find the ML solution vector [12]-[14]. Originally, SD was designed to handle real constellations, and it may be modified to process complex constellations as well. SD is a suboptimal detection scheme that considers only a small set of vectors within a given sphere rather than all possible transmitted signal vectors.

For an SD-based detection process, the complex representation of (2) can be transformed into an equivalent real representation of the system as follows:

$$\begin{bmatrix} \Re(\mathbf{y}) \\ \Im(\mathbf{y}) \end{bmatrix} = \begin{bmatrix} \Re(\mathbf{H}) & -\Im(\mathbf{H}) \\ \Im(\mathbf{H}) & \Re(\mathbf{H}) \end{bmatrix} \begin{bmatrix} \Re(\mathbf{s}) \\ \Im(\mathbf{s}) \end{bmatrix} + \begin{bmatrix} \Re(\mathbf{n}) \\ \Im(\mathbf{n}) \end{bmatrix} \quad (7)$$

where $\Re(\cdot)$ and $\Im(\cdot)$ denote real and imaginary parts of a complex value or vector. The dimensions of (2) are extended to $M_t=2M$ and $N_r=2N$, as shown in (7).

The SD method exploits the following relation [12]-[14]:

$$\arg\min_{\mathbf{s}} \|\mathbf{y}-\mathbf{Hs}\|^2 = \arg\min_{\mathbf{s}} (\mathbf{y}-\mathbf{Hs})^T(\mathbf{y}-\mathbf{Hs}) \quad (8)$$

The above ML estimate can be written as:

$$\arg\min_{\mathbf{s}} \|\mathbf{y}-\mathbf{Hs}\|^2 = \arg\min_{\mathbf{s}} (\mathbf{s}-\hat{\mathbf{s}})\mathbf{H}^T\mathbf{H}(\mathbf{s}-\hat{\mathbf{s}}) \quad (9)$$

where $\hat{\mathbf{s}} = (\mathbf{H}^T\mathbf{H})^{-1}\mathbf{H}^T\mathbf{y}$ is the unconstrained ML estimation for **s.**

Consider a sphere with radius r,

$$(\mathbf{s}-\hat{\mathbf{s}})^T\mathbf{H}^T\mathbf{H}(\mathbf{s}-\hat{\mathbf{s}}) \le r^2 \quad (10)$$

The SD search considers only the vectors inside this sphere. The metric in (9) can also be expressed as:

$$(\mathbf{s}-\hat{\mathbf{s}})^T\mathbf{H}^T\mathbf{H}(\mathbf{s}-\hat{\mathbf{s}}) = (\mathbf{s}-\hat{\mathbf{s}})^T\mathbf{U}^T\mathbf{U}(\mathbf{s}-\hat{\mathbf{s}}) = \left\|\mathbf{U}(\mathbf{s}-\hat{\mathbf{s}})\right\|^2 \quad (11)$$

where **U** is an upper triangular matrix of $M_t \times M_t$, obtained using the Cholesky factorization, such that $\mathbf{U}^T\mathbf{U} = \mathbf{H}^T\mathbf{H}$. The factorization can be done using QR decomposition as well, and then becomes, where R is an upper triangular matrix of $M_t \times M_t$. At the start, the last signal value, s_{M_t} in **s** is estimated in its own single dimension. The value is chosen from the point in the sphere $\left|u_{M_tM_t}(s_{M_t} - \hat{s}_{M_t})\right|^2 \le r^2$, where $u_{M_tM_t}$ is the element at the M_tth row and M_tth column of matrix **U**. In other words, this value must be chosen in the following range:

$$\hat{s}_{M_t} - \frac{r}{u_{M_tM_t}} \le s_{M_t} \le \hat{s}_{M_t} + \frac{r}{u_{M_tM_t}} \quad (12)$$

After choosing the point s_{M_t}, the sphere detector chooses a candidate value for s_{M_t-1} and continues until s_1. During the procedure of finding a candidate for each point, if no candidate value exists for $s_{m_t}, 1 \le m_t \le M_t$, the detector goes back to choose other candidate for s_{m_t+1}. In case no candidate value exits for s_{m_t}, after trying all possible candidate values for s_{m_t+1}, the sphere detector goes back to choose other value for s_{m_t+2}, and so on. Once we make candidate choices for $s_{M_t}, s_{M_t-1}, \cdots, s_1$, the corresponding radius is then calculated. Using this new radius, the detector proceeds to find better candidates.

In LSD, instead of searching for one best candidate as in the above SD algorithm, the N_c best candidates whose radius fall inside the initial radius r are searched to construct a subset list $\ell \subset X$ of size N_c [2], where $X = 2^{K \cdot M}$ is set complex constellation points from which transmitted symbol vector is selected. Once the list is full, the search continues for better candidates. If the radius of new candidate is smaller than that of the candidate with the largest radius in the list, then the list is updated by replacing the candidate that has the largest radius with the newly found candidate. The performance of LSD depends on the size of N_c. However, a large size of N_c means higher search complexity. As N_c is increased, the initial radius needs to be increased so that the sphere can contain the N_c candidates. If the radius is small, the decoder may fail to find any point inside the sphere. Using LSD, SBI estimation can be represented as:

$$L_e^c(x_{m,k} \mid \mathbf{y}) = \max_{\mathbf{s}\in\ell_{m,k}^{(+1)}} d_s - \max_{\mathbf{s}\in\ell_{m,k}^{(+1)}} d_s \quad (13)$$

where $\ell_{m,k}^{\pm 1} = \ell \cap \ell_{m,k}^{\pm 1}$.

In LSD, radius initialization plays an important role in the efficiency and complexity of searching the candidates. The initial radius r may be found by trial and error. For example, the following method was used to initialize the radius in a previous study [2]:

$$r^2 = 2\sigma^2\lambda N - \mathbf{y}^*(I - \mathbf{H}(\mathbf{H}^*\mathbf{H})^{-1}\mathbf{H}^*)\mathbf{y} \quad (14)$$

where σ^2 is the variance of complex Gaussian noise, and λ is a positive integer, chosen by trial and error according to the value of N_c.

B. Iterative Tree Search

The ITS detection scheme may have a lower complexity and better performance compared to LSD [3]. It produces an improved candidate list at each MIMO detector iteration by taking into account the a priori information fed back from the turbo decoder. This improved candidate list is generated by using a breadth-first tree search algorithm which is also known as the M-algorithm. Using a ITS scheme, near optimum performance is often achieved when the list size is only a small fraction of the full search space. As the candidate list is updated in each iteration which makes ITS detection method to be computationally complex.

C. The Chase Decoding

Originally the Chase decoding is suitable for hard decision ML detection for non-iterative MIMO systems [4]. It can be used in iterative MIMO systems by applying a suitable SBI estimation method. The Chase decoding algorithm involves five steps to detect information, as follows:

- Identify the index i of the signal to be detected.
- Detect a identified signal by applying linear filter. Apply a ML method to build a list L for identified symbol s_i.
- Generate L residual vectors by cancel out the contribution from received signal.

- Apply each of residual vectors to its independent j th sub detectors, which make decision about remaining transmitted symbols. together with s_i, the j th sub detector defines a single candidate.
- Apply a hard decision in order to choose the best candidate in the list that best represents the observation for the received signal.

IV. LLR Estimation for Reduced Search IDD

A. LLR Clipping Methods

The basic concept of the reduced search based detection is to exclude some of the candidates with lower probability. As the list size is reduced there is more probability of one of the hypothesis $\ell_{m,k}^{(-1)}$ or $\ell_{m,k}^{(+1)}$ is empty. In this case, we cannot estimate SBI because estimation of (9) is impossible. A simple way to solve this problem is to set the maximum SBI value for the corresponding bits to a predefined value. In [2], [3], constant values of ±8 and ±3 were used, respectively. This is commonly referred as an LLR clipping method. This method performs comparatively well for non-iterative MIMO detection, but it may lead to serious performance degradation for iterative MIMO detection. This is because allocating a constant SBI value to the list without a counter-hypothesis prevents the incorporation of soft outputs provided by the channel decoder. Therefore, its behavior reduces to a hard output detector [15], [16]. Other techniques have been proposed to solve this problem, including path augmentation and bit flipping methods [17]-[19], yet most of these approaches require high computational complexity.

B. Inserting Hypothesis Method

One of the solution to missing hypothesis is that setting suitable predefined value for each MIMO detector iteration. However, using different LLR clipping values for each iteration needs another process to find the optimal values. In addition, this method of finding the optimum LLR clipping value needs careful consideration of system parameters instead of a universal solution. Instead, we propose a more compact solution to obtain a more accurate SBI which is suitable for IDD.

For all the reduced search detection methods, the SBI for any given bit is computed by using the subset list $\ell_{m,k}^{\pm 1}$. However, if the list does not contain a hypothesis and its counter-hypothesis for some bits: $\ell_{m,k}^{\pm 1} = \emptyset$, the SBI for those bits cannot be calculated using the MAP detection method. To overcome this problem, we propose a method based on generating temporary candidates with a counter hypothesis for the corresponding bit position.

The initial list will be extended to a new list, $\ell_f = \{\ell, V_{N_c}\}$, where denotes the set of virtual candidates generated for SBI estimation,

$$V_{N_c} = \{v_1^1, v_1^2, \cdots v_1^l, \cdots, v_{N_c}^1, v_{N_c}^2, \cdots, v_{N_c}^l\} \qquad (15)$$

here l = MK, and $v_N^{m.k}$ is one of the virtual candidate for the Nth candidate, representing the counter hypothesis for the kth bit of the mth symbol.

V. Simulation Results

The bit error rate (BER) performance of the proposed method was evaluated using a MIMO system over a Rayleigh fading channel. The 3GPP defined turbo code with an in-formation block size of 378 bits and code rate of 1/3 was used, and the constraint length of each recursive systematic convolutional (RSC) component code was 4.

Fig. 2 represents the BER performance comparison of the proposed scheme with the conventional LSD schemes and full search MAP for an iterative 2 × 2 MIMO system with a 16-QAM scheme. The total number of outer iterations for the turbo decoder are represented by O_{it}, while total number of inner iterations (MIMO detector iterations) are represented as I_{it} . Even though full search MAP detector is the optimal detection method but its complexity makes it impractical. We can see that, using a fixed value of L_{clip}, the iterative system has serious performance degradation as inner iteration increases. Even if the L_{clip} value was optimized in the non-iterative system, the performance becomes worse as I_{it} increases.

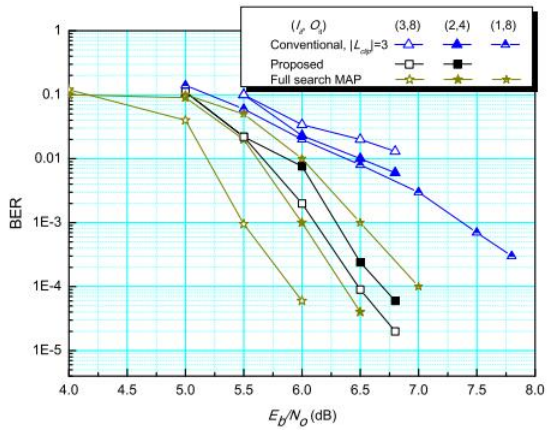

Figure 2. BER performance of 2 x 2 MIMO system with 16-QAM modulation scheme.

On the other hand, our proposed method of adding candidates for each missing hypothesis clearly improves the system performance as I_{it} increases.

VI. Conclusion

In this paper, we first investigated a number of reduced search based iterative MIMO detection schemes and discussed the most common problem of the reduced search methods due to the missing candidates. The conventional simple solution to this problem, known as LLR clipping method generally invokes serious performance degradation as iteration increases. We proposed a method to solve the problem of this conventional scheme. The proposed method is based on generating a counter hypothesis for each the candidate.

The proposed method is compared with the conventional LSD and full search MAP by using the simulation results. The simulation results show that the proposed method improves the BER performance with each iteration. Even if the simulation results were compared by applying the proposed method to the LSD scheme, the proposed method can be applied any kind of reduced search based scheme, including the ITS and Chase decoding schemes.

ACKNOWLEDGMENT

This research was supported by the MSIP(Ministry of Science, ICT and Future Planning), Korea, under the IT/SW Creative research program supervised by the NIPA(National IT Industry Promotion Agency) (NIPA-2013-H0502-13-1090)

REFERENCES

[1] C. Berrou and A. Glavieux, "Near optimum error correcting coding and decoding: turbo-codes," *IEEE trans. Commun.*, vol. 44, pp. 1261-1271, Oct. 1996.

[2] B. M. Hockwald and S. ten Brink, "Achieving near capacity on a multiple antenna channel," *IEEE trans. Commun.*, vol. 51, pp. 389-399, Mar. 2003.

[3] Y. L. C. de Jong and T. J. Willink, "Iterative tree search detection for MIMO wireless systems," in *Proc. VTC*, Sept. 2002, pp. 1041-1045.

[4] D. W. Waters and J. R. Berry, "The chase family of detection algorithms for multiple input multiple output channels," *IEEE Trans. of Signal Processing*, vol. 56, pp. 739-747, Feb. 2008.

[5] C. Studer and H. Bolcskei, "Soft-input soft-output singe tree-search sphere decoding," *IEEE Trans. Info. Theory*, vol. 56, pp. 4827-4842, Oct. 2010.

[6] J. Lee, B. Shim, and I. Kang, "Soft-input soft-output list sphere detection with a probabilistic radius tightening," *IEEE Trans. on Wireless Commun.*, vol. 11, pp. 2848-2857, Aug. 2012.

[7] P. Wang and T. Le-Ngoc, "A list sphere decoding algorithm with improved radius setting strategies," *Wireless Personal Commun.*, vol. 61, pp. 189-200, Nov. 2011

[8] M. Sellathurai and S. Haykin, "Turbo-BLAST for wireless communication: Theory and experiments," *IEEE Trans. Signal Process.*, vol. 50, pp. 2538-2546, Oct. 2002.

[9] J. W. Choi, A. C. Singer, J. W. Lee, and N. I. Cho, "Improved linear soft-input soft-output detection via soft feedback successive interference cancellation," *IEEE Trans. Commun.*, vol. 58, pp. 986-996, Mar. 2010.

[10] S. Ahmed and S. Kim, "Low complexity LSD scheme for joint iterative MIMO detection," *Journal of KICS.*, vol. 38, pp. 1051-1059, 2013.

[11] S. Ahmed and S. Kim, "An efficient LSD scheme for joint iterative MIMO detection," *Submitted in IET Commun.*, 2014.

[12] U. Fincke and M. Pohst, "Improved methods for calculating vectors of short length in a lattice, including a complexity analysis," *Math. Comput.*, vol. 44, pp. 463-471, Apr. 1985.

[13] M. Pohst, "On the computation of lattice vectors of minimal length, successive minima and reduced bases with applications," in *Proc. ACM SIGSAM*, 1981, pp. 37-44.

[14] E. Viterbo and J. Boutros, "A Universal lattice code decoder for fading channels," *IEEE Trans. Inform. Theory*, vol. 45, pp. 1639-1642, July 1999.

[15] E. Zimmermann, D. L. Milliner, J. R. Berry, and G. Fettweis, "Optimal LLR clipping levels for mixed hard/soft output detection," in *Proc. IEEE Global Telecommunications Conference*, Dec. 2008, pp. 1-5.

[16] M. T. Gamba, "Algorithms and architectures for the detection of MIMO signals," Ph.D. dissertation, Politecnico Di Torino, Italy, 2011.

[17] S. Baro, "Turbo detection for MIMO systems using a list sequential detector: Improved soft output by path augmentation," in *Proc. ITG Conference on Source and Channel Coding*, 2003.

[18] R. Wang and G. Giannakis, "Approaching MIMO channel capacity with reduced-complexity soft sphere decoding," in *Proc. IEEE Wireless Communications and Networking Conference*, Mar. 2004, pp. 1620-1625.

[19] D. L. Milliner, E. Zimmermann, J. R. Berry, and G. Fettweis, "Channel state information based LLR clipping in list MIMO detection," in *Proc. IEEE Symposium on Personal, Indoor and Mobile Radio Commun.*, Sept. 2008, pp. 1-5.

Saleem Ahmed before receiving the masters degree from Myongji University in electronics and communication engineering in 2009, he completed a bachelors of Engineering degree in computer system Engineering from Quaid-e-awam University, Nawabshah, Pakistan in 2005. From Feb 2009 to July 2010, he was with COMSATS Institute of IT, Pakistan. Where he worked as lecturer and was involved in research and other education activities. Currently, he is pursuing PhD degree in electronics and communication Engineering from Chonbuk National University, South Korea.

Professor Sooyoung Kim received the B.S degree in electrical and electronics engineering from KAIST, Korea, in 1990. After having worked Satellite Communication Technology Division, ETRI, Korea from February 1990 to September 1991, she received the M.Sc and the Ph.D degree in electrical and electronics engineering from University of Surrey, U.K in 1992 and 1995 respectively. From November 1994 to June 1996 she was employed as a research fellow at the Centre for Satellite Engineering Research, University of Surrey, U.K. In 1996 she re-joined the Satellite Communication Technology Division, ETRI, Korea, and worked as a team leader until February 2004 to develop efficient transmission techniques for digital satellite communication systems. She is now a professor in Chonbuk National University. Her research interests include coded MIMO schemes and iterative soft detection and decoding for wireless communication systems. She has been working on ITU-R since 2000, and has contributed to make radio interface standard of satellite component in the IMT system. Now, she is actively working on Working Party 4B of ITU-R, and she was appointed as an international standardization expert in Korea. She has published more than 100 technical papers in the field of wireless/satellite communications. She has been a Technical Program Committee (TPC) member at various conferences including IEEE GLOBECOM and ICC, and co-chaired satellite systems track at VTC 2008 spring.

Hyung Jick Ryu received the B.S degree in information and communications engineering from HUFS(Hankuk University of Foreign Studies), Korea, in 2002. And received M.Sc degree continuously in information and communications engineering from HUFS, Korea, in 2004. He is now researcher in Comesta, inc., since 2004. His research interests include synchronization, equalization of single/multi-carrier wireless communication systems, and iterative soft detection and decoding for wireless communication systems. He has worked implementing for terrestrial and satellite modem projects from ETRI, Korea, since 2004.

Won Yong Kim received the B.S and the M.Sc degree in electronics engineering from Chonnam University, Korea in 1995 and 1997 respectively.From March 1997 to August 1999 he was employed as a research fellow at ETRI, Korea. And From August 1999 to December 2002 he worked as a team leader to develop satellite modem system for military radio communication. Now He is a CTO in Comesta Inc. His research interests include synchronization, equalization and efficient transmission techniques for digital communication systems.