Design and Development of a Haptic Device For Academic Research

Héctor Hugo Cortés Dueñas
University of Colima/Faculty of Telematics, Colima, Mexico
hector_h.cortes@hotmail.com

Miguel ÁngelGarcía Ruiz
Algoma University, Sault Ste. Marie, Ontario, Canada

[1]***Abstract*-This paper discusses how the term "haptic" can be used to represent four aspects or actions from daily life that can be represented through vibrations, thus complementing or excluding the use of other senses such as vision and hearing. The SUS and the Think Aloud Protocol were used to evaluate the degree of satisfaction users experienced while testing the haptic device developed as part of this work. The results obtained from these evaluation instruments are also discussed in this paper.**

Index Terms: **Haptics, Human-computer interaction, user - centered design, virtual reality.**

I. Introduction

The term haptics often generates confusion and actually there are people who think that the haptic sense and the sense of touch are exactly the same. However the haptic sense is *related* to the use of the sense of touch but in a conscious way in order to obtain useful information from the object that is being touched [1]. We must not confuse the term "haptics" with the concept of sense of tocuh. The main difference is that when we use the sense of touch in an active and conscious way, we are indeed using the haptic sense.Haptics is a branch of Virtual Reality, whose main goal is to achieve an effect of immersion on the users. Haptcis is also tightly related to the Human Computer Interaction (HCI) discipline. For instance, when the haptic sense of a person is being studied, HCI experts seek to develop devices that improve and enhance the interaction between a user and a computer-generated application [2].

II. Origin of the Problem

When performing daily activities, most people employ the sight and hearing senses in order to perceive the world that surrounds them and therefore to act in consequence. However it has been demonstrated that these two senses could not be enough to generate in a person a proper idea about what is really happening. On the other hand, the haptic sense is under-used by the majority of people. The brain reactions and conections that take place when a human being uses the sense of touch in an active and conscious way (haptics) may allow them to perform an specific action based on appropriate information received via the haptic sense, thus creating a more complete learning process in any given situation [3].The authors of this paper set the goal of proving the hipothesys that it is possible to represent four different actions in the real world with four different levels of vibration, which represent haptic feedback for the users of the haptic device proposed on this paper. In addition to this hipothesys, the authors analyzed and demonstrated the fact that a user could link a level of vibration of the haptic device with an specific action without using the sight and hearing senses.The main goal of this proposal is to develop a haptic device that involves the haptic sense of users in order to complement more appropriately any activity. Another goal is to assess the haptic device with valid evaluation instruments in order to determine the acceptance level the haptic device has among users.

III. Development of the Haptic Device

The electronic components used for the development of the haptic device are:

1 PIC 18F2550 microcontroller. This component was chosen because it has USB compatibility, and the haptic device is connected to a computer by using any USB port available.

1 H-bridge (L293D) driver. This component is also compatible with the USB technology and the PIC 18F2550 microcontroller.

1 20 MHz quartz crystal.Various capacitors and resistors of different values.

IV. Scheme of Interaction Between the Haptic Device and the Computer

Before the assembly of the haptic device took place, the authors designed a general diagram of interaction between the haptic device and the computer.

Manuscript received July 23, 2013; revised March 26, 2013.
Paper NCT018. Authors:Hector Hugo Cortes Dueñas, Miguel Angel García-Ruiz.

doi: 10.12720/lnit.1.3.114-117

The scheme of interaction is depicted in the next figure.

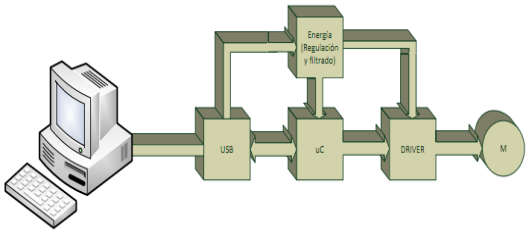

Figure 1. Scheme of interaction between the haptic device and the USB port of a computer.

The next step alter having designed the general diagram of interaction, is to create a diagram that could be used as a guide for the necessary electronic connections.

The next figure represents the electronic diagram designed.

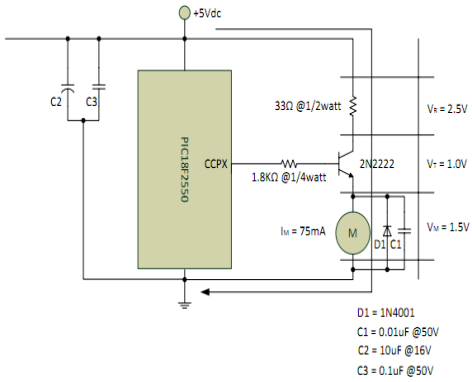

Figure 2. Electronic diagram designed to develop the haptic device.

V. Proteus Simulation Program

Proteus is a computer-based simulator that allows the user to make virtual electronic connections, thus avoiding possible malfunctioning when connecting the actual electronic components. The authors used Proteus simulator in an (successful) attempt to reduce the final cost of the haptic device.

Fig. 3 depicts the virtual connections of the haptic device in Proteus Simulator.

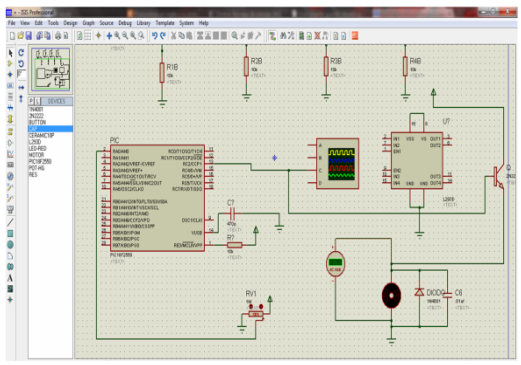

Figure 3. Virtual connections of the haptic device in Proteus Simulator.

VI. Life Cycle Model

In order to develop the haptic device following a life cycle model, the authors decided to use the Evolutionary Prototype. This model adequates perfectly to the development of the haptic device proposed on this paper because it focuses on the refinement of the prototype until it complies with the requirements of the users and developers [4].

The Evolutionary Prototype life cycle model suggests three types of prototypes: low fidelity, medium fidelity and high fidelity prototypes.

A low fidelity prototype is generally paper-based and it is cheap to develop. This prototype is ideal to represent and correct the initial ideas of the final product[5].

A medium fidelity prototype is based on a low fidelity prototype. The cost of the medium fidelity prototype is higher than the previous one, but the users can not witness all the functionalities the final product will have[5].

A high fidelity prototype offers the functionalities the final product (haptic device in this case) has. It is more expensive than low and medium fidelity prototypes and it can be tested in real situations by real users[5].

The haptic device developed for this research work is depicted in the next figure.

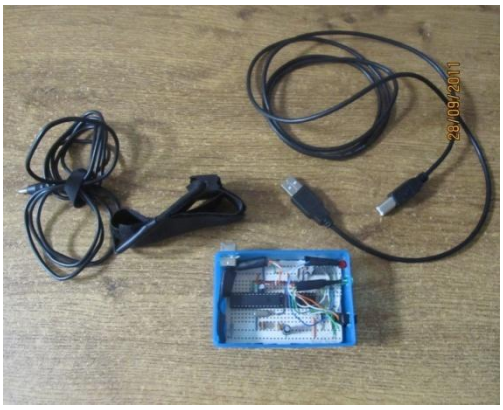

Figure 4. Haptic device finished (Final product).

VII. Evaluation Process

The SUS (System Usability Scale) Questionnaire and the Think Aloud Protocol are two evaluation instruments the authors used to assess the usability of the haptic device proposed on this paper.

VIII. Sus Questionnaire

The SUS Questionnaire was developed and implemented for the first time in 1986 and its main goal is to measure the level of satisfaction users have about positive and negative aspects of a completed application[6]. Ten SUS Questionnaires of ten questions each were answered by ten students of the Faculty of Telematics of the University of Colima. The results of these questionnaires are presented in the Results section.

IX. Think Aloud Protocol

The Think Aloud Protocol consists in asking the users (ten students of the Faculty of Telematics of the

University of Colima) to use the haptic device and at the same time to speak out (think aloud) any perceptions and opinions regarding the haptic device and its functionalities. The next step is to write down the users' perceptions and opinions in order to identify inconsistences of the haptic device. The last task in the Think Aloud Protocol is to make the necessary modifications to the haptic device so the negative perceptions and opinions decrease or dissapear[7].

A student of the Faculty of Telematics of the University of Colima is depicted in Fig. 5.

Figure 5. Student of theuniversity of colimatesting the haptic device.

X. CoVi Application

To achieve a successful interaction between the users and the haptic device proposed on this paper it was necessary to create a graphic application named CoVi (Vibration Controller). CoVi allows the user to select a level of vibration (out of four different) which is transmitted to the user through the haptic device.

CoVi works as follow: The user runs CoVi (coded on .NET platform), the button "Escanear" (Scan) is pressed and if the haptic device is connected to the computer, CoVi detects it automatically. The user then selects a vibration level (values from 1 to 4) and the button "Enviar" (Send) is pressed. In response to this action the haptic device (which the user is wearing) vibrates depending on what vibration leves was selected. The user feels the vibration from a micromotor/vibrator that is contained in a wristband.

XI. Results of the Think Aloud Protocol

The most important perceptions and opinions the users spoke aloud during the Think Aloud Protocol are listed below.

1) The haptic device can be easily connected with the computer, because USB ports are present in most modern computers.
2) The graphic application (CoVi) opens and runs correctly and the ontroduction of data does not represent a problem at all.
3) The wristband that contains the micromotor/vibrator is easy to wear on.
4) The difference between each of the four vibration levels of the haptic device is easily perceivable. It is necessary to feel every vibration level two or three times in order to identify them without using the sight and hearing senses.

These perceptions and opinions obtained from the students who assessed the haptic device suggest that the Evolutionary Prototype life cycle played an important role during the development of the haptic device. Because otherwise, negative opinions would have arisen during the Think Aloud Protocol.

XII. SUS Questionnaire Results

The even and odd questions in the SUS Questionnaire are evaluated in a different way. The possible values for every question range from 1 to 5 based on the Likert scale. The value 1 represents a disagreement with the question while the value 5 means that the user totally agrees with what is being asked. An acceptable grade of the SUS Questionnaire is 70%. The maximum possible score is 100%.

The results obtained in the SUS Questionnaire are shown in TableI.

TABLE I. Results of the Sus Questionnaires

Questionnaire #	**Total of evenquestions**	**Total of unevenquestions**	**Final Result** (Even questions + Uneven questions * 2.5)
1	16	16	32*2.5= 80
2	16	16	32*2.5= 80
3	17	19	36*2.5=90
4	19	17	36*2.5=90
5	18	17	35*2.5=87.5
6	18	16	34*2.5=85
7	19	14	33*2.5=82.5
8	17	14	31*2.5=77.5
9	14	16	30*2.5=75
10	18	16	34*2.5=85

The average score of the ten SUS Questionnaires is 83.25%. This score represents the level of satisfaction the users had regarding the usability aspect of the haptic device when tested. 83.25% is a highly acceptable value, so the usability level of the haptic device is very good among students with ages ranging from 18 to 25 years.

Based on the average score (83.25%), the standard deviation can be calculated. Taking the results of Table 1, the standard deviation is 4.87%. This means that the haptic device has a maximum usability level of 88.12% and a minimum usability level of 78.37%. Both grades are acceptable enough for usability purposes.

XIII. Conclusions

The Evolutionary Prototype life cycle model and the evaluation instruments (SUS Questionnaire and Think Aloud Protocol), along with the final results from this assessment procedures make clear that the functionality and usability levels of the haptic device proposed on this paper were high and acceptable. This situation lead us to think that the haptic device could be used as a complement to the common teaching-learning techniques of any academic discipline.

The graphic applicationCoVi is easy to use and it allowed the users (students of the University of Colima) to interact with the haptic device while testing it.

XIV. Future Work

Listed below are some suggestions to enhance the project presented in this paper:

1) To select a bigger group of users who could test the haptic device in order to obtain more valid results from the SUS Questionnaires and the Think Aloud Protocol.
2) To search and apply evaluation methods apart from the SUS Questionnaire and the Think Aloud Protocol.
3) To use more vibration levels in order to represent more activities or actions that can be related to every level.
4) Analyze different fields of study in order to implement appropriately the haptic device proposed on this paper.

References

[1] S. Biggs and M. Srinivasan,*Haptic Interfaces, Handbook of Virtual Environments*, London, UK: Lawrence Erlbaum Inc, 2002.

[2] A. Sears and J. Jacko, *Human-Computer Interaction Handbook: Fundamentals, Evolving Technologies and Emerging Applications*, New York, NY, USA: CRC Press, 2007.

[3] J. Minogue and M. Jones, "Haptics in education: Exploring an untapped sensory modality," *Review of EducationalResearch*, vol. 76, no. 3, pp. 317-348, 2006.

[4] S. McConnell. *Development and Management of Informatic Projects. How to Master Tight Software Plannifications*. Madrid, Spain, 1997.

[5] G. Perlman, "The firstsearch user interface architecture: universal access for any user, in many languages, on any platform," in *Proc. Conference on Universal Usability*, New Orleans, Louisiana.USA, 2000.

[6] G. Albaum,"The likert scale revisited: An alternate version," *Journal of the Market Research Society*, vol. 2, 1997.

[7] M. Fonteyn, B. Kuipers, and S. Grobe, "A Description of Think Aloud Method anProtocol Analysis," *Journal of Qualitative Health Research*,vol. 3, 1993.

Hector H. Cortes was born in Colima, Mexico on May 18th 1987. Mr. Cortes is currently Student of the Master in Computer Science for the University of Colima, Mexico 2011-2013.

His main field research is Human-Computer Interaction with orientation towards education. He studied for one semester at The University of Oklahoma, USA back in 2008 while studying his TelematicsEngineering degree which he obtained in 2009 at the University of Colima, Mexico.

Mr. Cortes was honored with the Best Paper Award of the Session "Education and Information Systems II" during the CISCI (Ibero-American Conference on Systems, Cybernetics and Informatics)2010 Conference, held in Orlando, Florida, USA.

Miguel A. Garcia-Ruiz graduated in Computer Systems engineering and obtained his MSc in Computer Science from the University of Colima, Mexico. Miguel received his PhD in Computer Science and Artificial Intelligence from the Centre for Research in Cognitive Science (COGS), University of Sussex, UK. Dr. Miguel Garcia-Ruiz took a virtual reality course at Salford University, England, and a graphics techniques internship at the Madrid Polytechnic University, Spain.

Miguel has been teaching Computer Science courses, and doing research mainly on virtual reality and multimodal interfaces at the University of Colima. Dr. Miguel Garcia-Ruiz has published various books and scientific papers in major journals, and has directed a video documentary about an introduction to virtual reality. Currently, Miguel is a Visiting Professor at the Faculty of Business and IT, University of Ontario Institute of Technology, Canada.